SPECIFICATION APPLIED

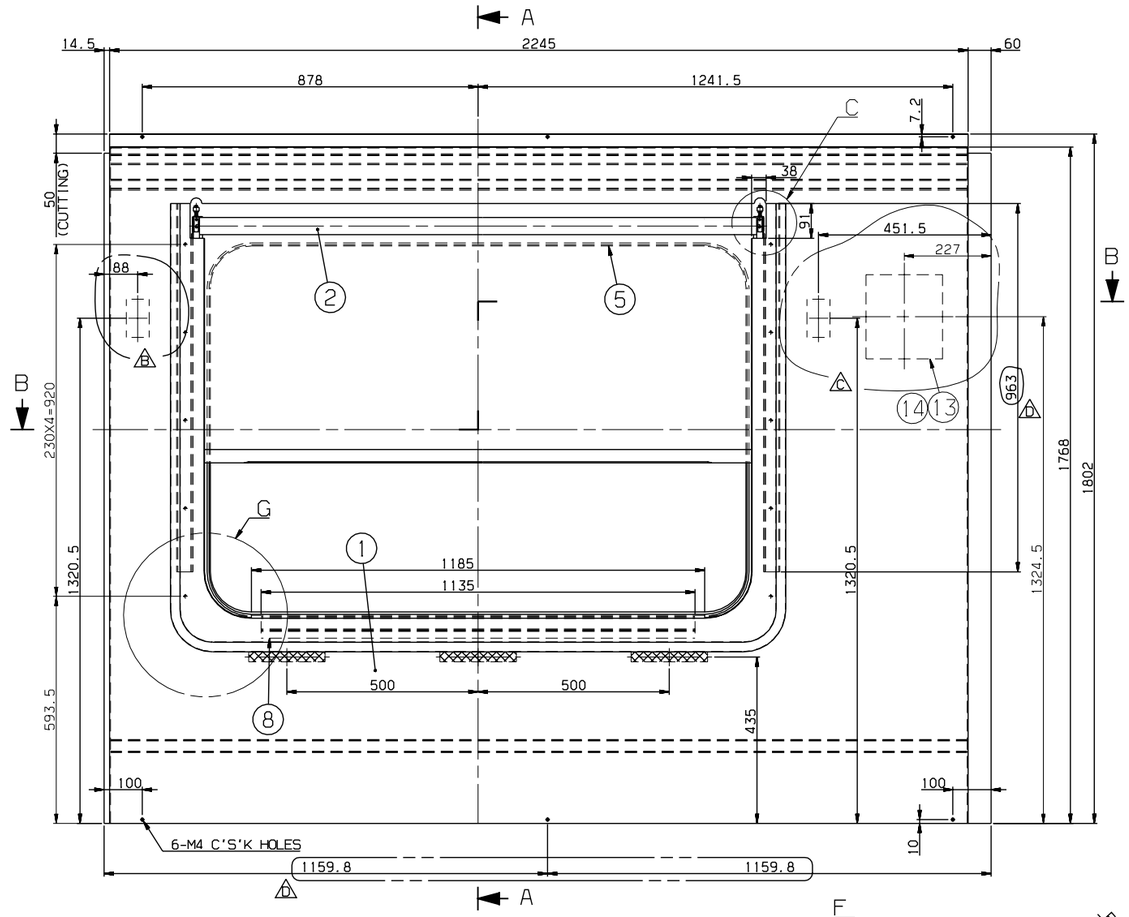

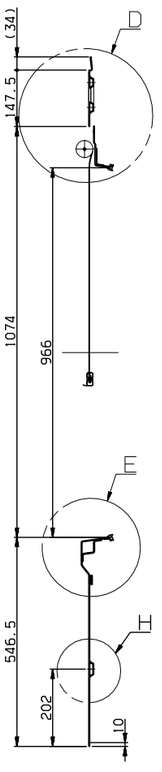

SECTION A-A

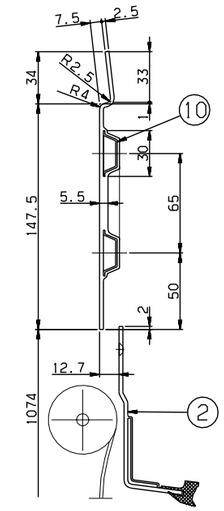

DETAIL D
SCALE=1/2

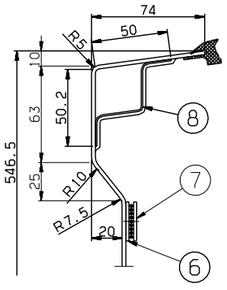

DETAIL E
SCALE=1/2

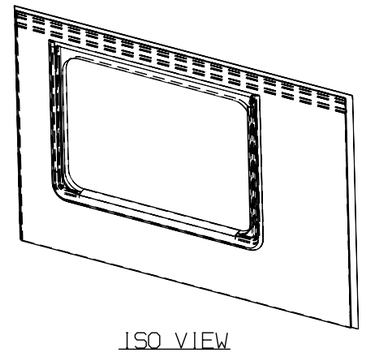

ISO VIEW

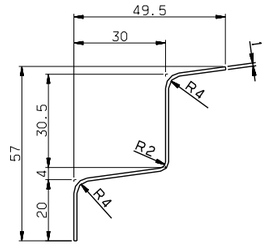

DETAIL #8
SCALE=1/1

NOTE

1. AN INTERIOR PANEL'S COLOR(RAL 7047) AND SURFACE SHALL BE MANUFACTURED AFTER SAMPLE'S APPROVAL BY CUSTOMER
2. PART 5 SHALL BE CUT ADEQUATELY AND USED
3. PART 2 SHALL BE WELL OPERATED UNDER CONDITION OF ASSEMBLY
4. PART 6 SHALL BE FIXED ON THE PART 1, AND PART 7 SHALL BE DELIVERED SEPERATETLY
5. THE INTERFACE BETWEEN PART 1 AND PART 2 SHALL BE STRONGLY SEALED
6. PART 4 SHOULD BE APPLIED WITH PART 15.

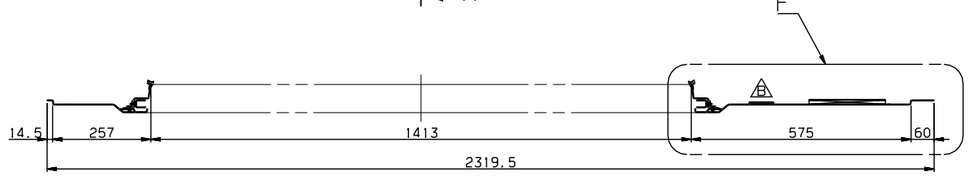

SECTION B-B

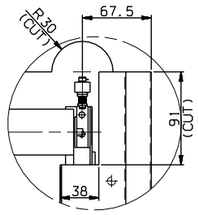

DETAIL C
SCALE=1/3

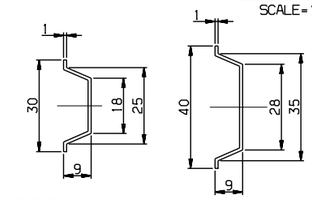

DETAIL #10
SCALE=1/1

DETAIL #9
SCALE=1/1

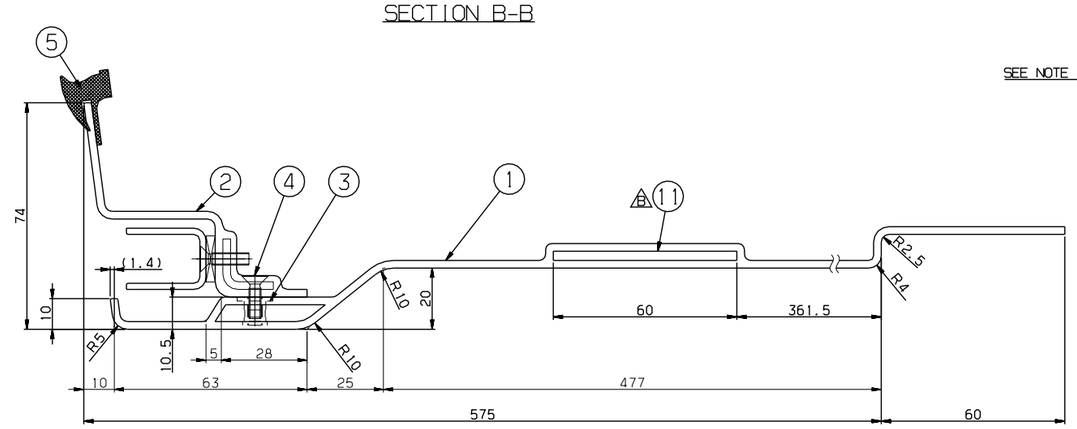

DETAIL F
SCALE=1/1

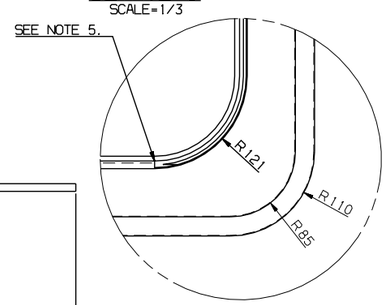

DETAIL G
SCALE=1/4

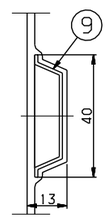

DETAIL H
SCALE=1/1

15	CP910004-406	ADHESIVE	ASSY	1		LOCTITE 242
14	RFP51021AN0-014	PACKING	NEOPRENE RUBBER	1		PL.T2X220X200
13	RFP51021AN0-013	PACKING	NEOPRENE RUBBER	1		PL.T10X220X200
~~12~~	~~RFP51021AN0-012~~	~~SEAT.TAP~~	~~SUS304~~	~~1~~	~~-~~	~~PL.T3X220X200~~
11	RFP51021AN0-011	SEAT.TAP	SUS304	2		PL.T3X100X60
10	RFP51021AN0-010	STIFFENER	A1050P	2		T1
9	RFP51021AN0-009	STIFFENER	A1050P	1		T1
8	RFP51021AN0-008	STIFFENER	SUS304	1		T1.L=1135
7	RFP51021AN0-007	DUAL_LOCK FASTENER	ASSY	3		3M,SJ-3550 L=200(DUAL TAPE)
6	RFP51021AN0-006	DUAL_LOCK FASTENER	ASSY	3		3M,SJ-3551 L=200(DUAL TAPE)
5	RFP51021AN0-005	RUBBER,SECTION	ASSY	1		RFP51011AN0,L=4600
4	RS60607-098S	SCREW,F,H	SUS304	10		M4X14
3	RFP51021AN0-003	NUTSERT	SUS304	10		M4
2	RFP51009AN0	PANEL,BLIND WINDOW	ASSY	1		
1	RFP51021AN0-001	PANEL	FRP	1		T2.5

품번 NO.	부품 번호 PART NO.	품명 DESCRIPTION	재질 MATERIAL	수량 Q'TY	중량 W.T	비고 REMARKS

Dx4	2014.12.18	ADDED PART NO#15 & DIMENSION	3D5101-U181	H.U.LEE	K.B.PARK	J.Y.LEE			
CX2	2011.03.23	ADDED PART NO#13&14. DELETED PART NO.#12.	3D5101-U151	Y.T.KIM	K.B.PARK	J.H.PARK			
BX5	2011.02.10	ADDED PART NO#11&12.	3D5101-U146	Y.T.KIM	K.B.PARK	J.H.PARK			
AX1	2009.07.15	CHANGED PART NO.3.	3D5101-U081	Y.D.KIM	H.S.KIM	H.G.RYU			
기 술 MARK	일 자 DATE	변 경 내 역 DETAIL OF REVISION(E.C ZONE)	설변번호 E.C NO.	설계 DGN	검도 CHK	승인 APP	기 술 MARK	일 자 DATE	변 경 내 역 DETAIL OF REVISION(E.C ZONE)	설변번호 E.C NO.	설계 DGN	검도 CHK	승인 APP

일반공차 GENERAL TOLERANCE			
주조 CASTING	~ 40	2	4
	~ 30	2	3
	~ 10	1	1.5
용접 WELDING	< 3	0.5	1
절삭 MACHINING	~ 3150	-	7
	~ 1600	4	5
	~ 800	3	4
	~ 400	2	3
	~ 200	1.5	2
	~ 100	1	1.5
등급 GRADE		A	B
주조 CASTING			
	~ 20M	8	16
	~ 15M	7	12
	~ 12M	6	10
	~ 8M	5	8
	~ 4M	4	6
	~ 2M	3	4
	~ 1M	2	3
	~ 315	1	2
	~ 120	1	2
	~ 30	1	1
등급 GRADE		A	B
용접 WELDING			
	~ 20M	-	6.0
	~ 15M	-	5.0
	~ 12M	-	4.0
	~ 8M	-	3.0
	~ 4M	0.8	2.0
	~ 2M	0.5	1.2
	~ 1M	0.3	0.8
	~ 315	0.2	0.5
	~ 120	0.15	0.3
	~ 30	0.1	0.2
	1~6	0.05	0.1
등급 GRADE		A	B
기계 가공품 MACHINING			

승인 APP	H.G.RYU 2009.02.26	재질 MAT'L	ASSY	미 수		
검도 CHK	H.S.KIM 2009.02.26	중량중 G.W				
설계 DGN	Y.D.KIM 2009.02.25	일 정 지 시	MC / WD / CT	TITLE	WINDOW,MASK,TYPE P	
제도 DRG	S.W.LEE 2009.02.25		B / B / B	도면 번호 DRG. NO	MS RFP51021AN0	Ver. 00 / Rev. -D
			SIZE A1	SCALE 1/8	◎◈ SHEET 1 of 1	

3D5101 RFP- 넌-PRJT

HYUNDAI Rotem 현대로템주식회사

설계변경 REF. NO. FPP08307

본 도면은 당사 재산권에 해당하며 무단복사/배포 금지됨. PROPERTY OF ISSUING ENTITY. CANNOT BE DISTRIBUTED OR REPRODUCED WITHOUT AUTHORIZATION.

CATIA